London Academy of Mathematics

AQA - GCSE Maths
Aiming for a 9
Paper 2&3 (calculator) - Set 2
Worked solutions

Compiled by Chris Nunes, created by AQA Education

Do not write outside the box

Answer **all** questions in the spaces provided.

1 The circle $x^2 + y^2 = 25$ touches each side of the square as shown.

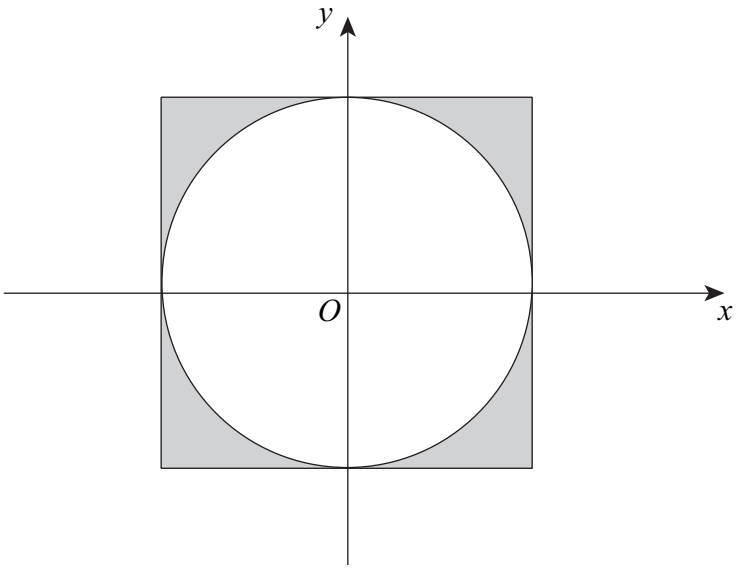

Not drawn accurately

Work out the total shaded area.

Area of Square = $d^2 = (2 \times 5)^2 = 100$

Area of circle = $\pi r^2 = \pi (5)^2 = 25\pi$

Shaded area = $100 - 25\pi$

$= 21.46$ to 2dp

Answer 21.46 *(3 marks)*

3

Turn over ▶

Do not write outside the box

2 w is an integer such that $6 \leqslant 3w < 18$
x is an integer such that $-4 \leqslant x \leqslant 3$

2 (a) Work out **all** the possible integer values of w.

$2 \leq w < 6$

$\therefore w = 2, 3, 4, 5$

Answer $2, 3, 4, 5$ *(3 marks)*

2 (b) Write down the **highest** possible value of x^2

Answer $(-4)^2 = 16$ *(1 mark)*

2 (c) Work out the **lowest** possible value of $w - x$

$2 - 3 = -1$

Answer -1 *(2 marks)*

Do not write outside the box

3 The sketch graphs of two straight lines are shown.

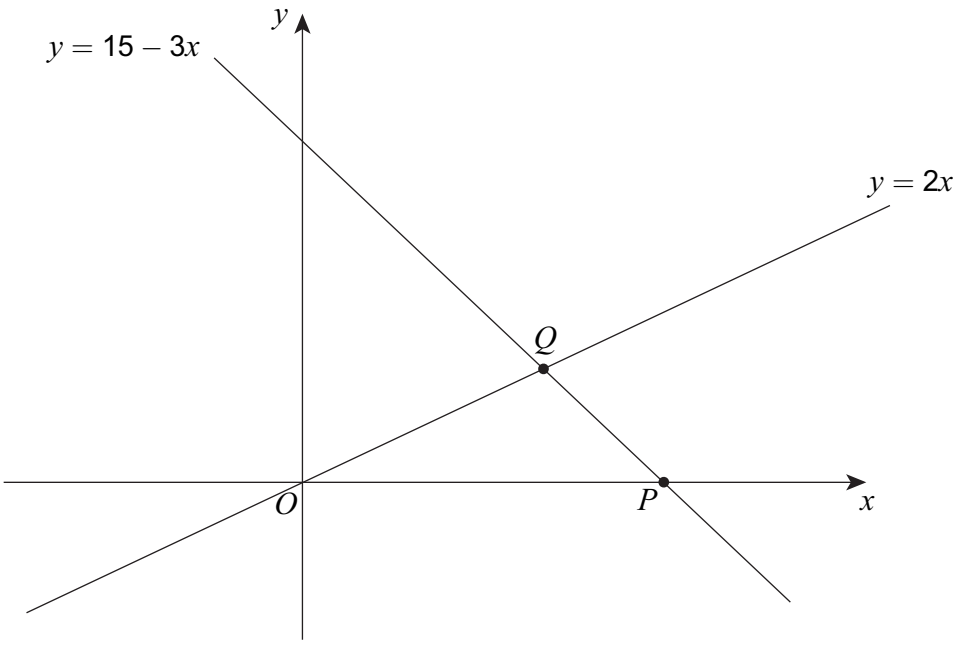

3 (a) Work out the coordinates of P.

$y = 0 \quad \therefore \quad 15 - 3x = 0 \Rightarrow x = 5$

Answer (5 , 0) *(1 mark)*

3 (b) Work out the coordinates of Q.

$y = 2x$

$y = 15 - 3x$

$2x = 15 - 3x$

$5x = 15$

$x = 3$

sub $x = 3$ into $y = 2x$

$y = 6$

Answer (3 , 6) *(3 marks)*

3 (c) Use your answers to parts (a) and (b) to work out the area of triangle OPQ.

Area $OPQ = \frac{x_P \times y_Q}{2} = \frac{5 \times 6}{2} = 15$

Answer 15 *(2 marks)*

12

Turn over ▶

Do not write outside the box

4 You are given that $m : n = 2 : 5$

4 (a) Write m in terms of n.

$$\frac{m}{n} = \frac{2}{5} \Rightarrow m = \frac{2}{5}n$$

$m =$ $\frac{2}{5}n$ *(1 mark)*

4 (b) You are also given that $a : b = 10m : 3n$

Work out $a : b$ where a and b are integers.

$a : b = 10m : 3n$

$= 10\left(\frac{2}{5}n\right) : 3n$

$= 4n : 3n$

$= 4 : 3$

Answer 4 : 3 *(2 marks)*

Do not write outside the box

6 (a) Show that $\dfrac{c^2+5c+4}{3c+3}$ simplifies to $\dfrac{c+4}{3}$

$$\frac{\cancel{(c+1)}(c+4)}{3\cancel{(c+1)}} = \frac{c+4}{3}$$

(2 marks)

6 (b) Hence, or otherwise, simplify fully $\dfrac{c^2+5c+4}{3c+3}+\dfrac{3-2c}{6}$

$$= \frac{c+4}{3} + \frac{3-2c}{6}$$

$$= \frac{2(c+4)+3-2c}{6}$$

$$= \frac{2c+8+3-2c}{6}$$

$$= \frac{11}{6}$$

Answer $\dfrac{11}{6}$ *(3 marks)*

Do not write outside the box

7 The graph shows two straight lines.

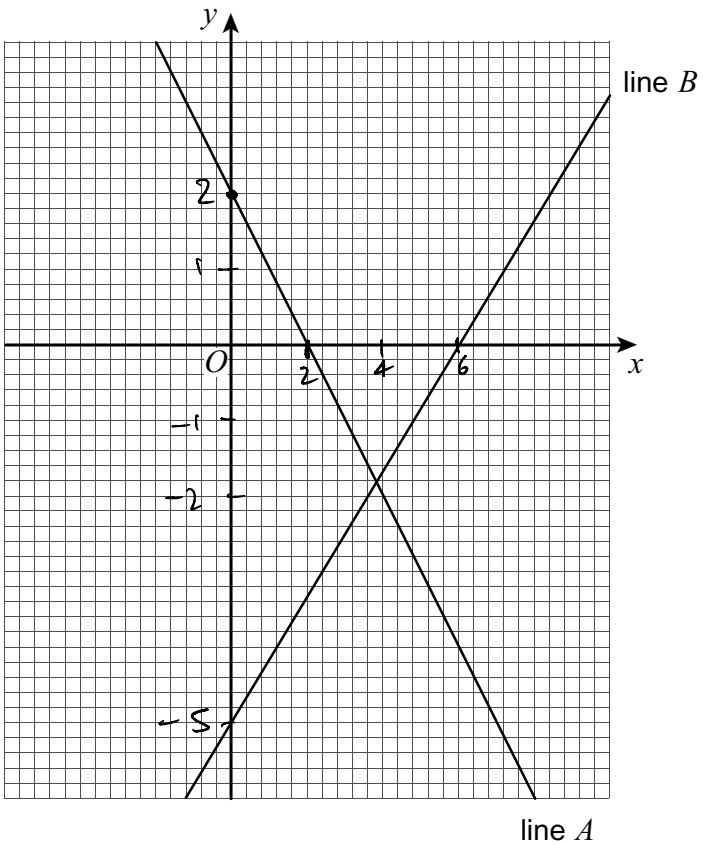

The equation of line A is $y = 2 - x$

Work out the equation of line B.

y-intercept of line A : (0, 2)
y-intercept of line B : (0, −5)
x-intercept of line A : $y = 0 \Rightarrow x = 2$
∴ x-intercept of line B : (6, 0)

Line B : $y = mx + c$
$c = -5$ $m = \frac{-5-0}{0-6} = \frac{-5}{-6} = \frac{5}{6}$

Answer $y = 5/6\,x - 5$ *(4 marks)*

9

Turn over ▶

Do not write outside the box

9 $PQRS$ is a trapezium.

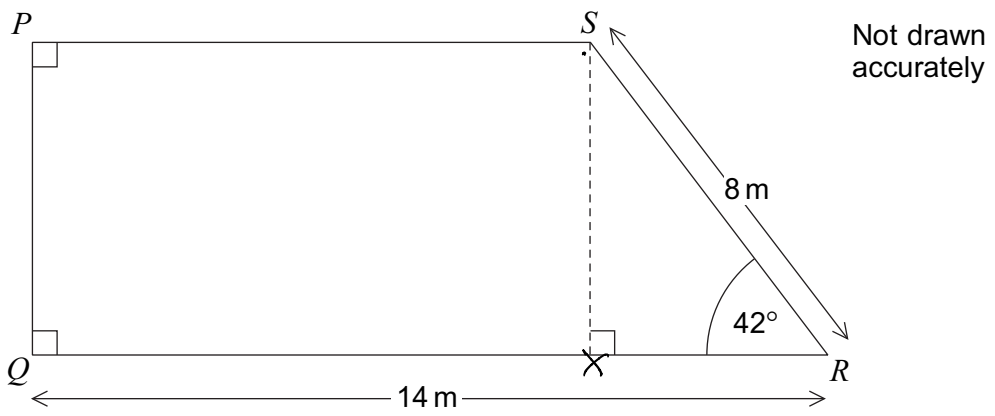

Work out the perimeter of $PQRS$.

$\sin(42) = \frac{XS}{8}$

$XS = 8\sin(42) = 5.353...$

$\cos(42) = \frac{XR}{8}$

$XR = 8\cos(42) = 5.945...$

Perimeter $= 14 + 8 + (14 - 5.353...) + 5.945...$

$= 36.59$ m to 2dp

Perimeter = 36.59 m *(5 marks)*

8

Turn over ▶

Do not write outside the box

12 Prove that $(5n+3)(n-1)+n(n+2)$
is a multiple of 3 for all integer values of n.

$5n^2+3n-5n-3+n^2+2n$

$=6n^2-3$

$=3(2n^2-1)$

which is a multiple of 3

(4 marks)

Do not write outside the box

14 Work out an expression for the nth term of the quadratic sequence

11 15 21 29 39 .....

(†)

+4 +6 +8 +10

+2 +2 +2

$a = \frac{2}{2} = 1$

u_n	11	15	21	29	39
n^2	1	4	9	16	25
$u_n - n^2$	10	11	12	13	14

(*)

n^{th} term of (*) is $n+9$

$\therefore$ n^{th} term of (†) is

$n^2 + n + 9$

nth term = $n^2 + n + 9$ *(4 marks)*

12

Turn over ▶

Do not write outside the box

15 (a) $a^{11} \times b^6 \times c = a^9 \times b^{10}$

Write c in terms of a and b.
Give your answer in its simplest form.

$$c = \frac{a^9 \times b^{10}}{a^{11} \times b^6} = a^{-2} \times b^4$$

$c =$ $a^{-2} \times b^4$ *(3 marks)*

15 (b) $p^{-2} = q^6 \times r^4$

Write p in terms of q and r.
Give your answer in its simplest form.

$$(p^{-2})^{-1/2} = (q^6 \times r^4)^{-1/2}$$

$$p = q^{-3} \times r^{-2}$$

$p =$ $q^{-3} \times r^{-2}$ *(2 marks)*

Do not write outside the box

16 A, B and C are points on the circumference of a circle.

- BC is a diameter
- BCP is a straight line
- AP is a tangent to the circle
- $PC = CA$

Not drawn accurately

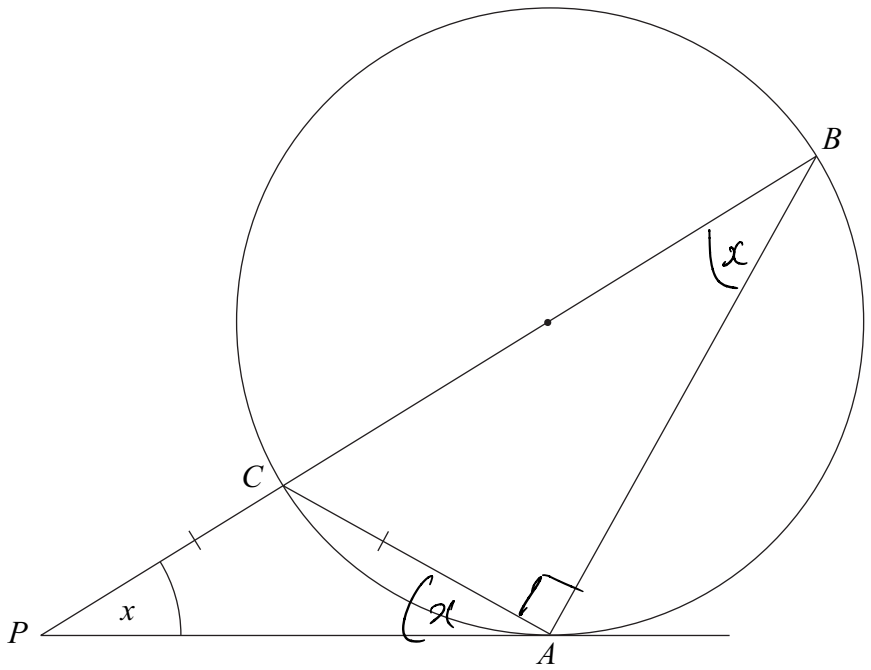

Work out the value of angle CPA, marked x on the diagram.

$\angle CAP = x$ since ACP is isosceles

$\angle CBA = x$ by alternate segment theorem

$\angle BAC = x$ since angle in semi-circle is a right angle.

$x + x + 90^\circ + x = 180^\circ$ since BAP is a triangle

$3x + 90^\circ = 180^\circ$

$3x = 90^\circ$

$x = 30^\circ$

$x =$ 30 degrees *(5 marks)*

10

Turn over ▶

Do not write outside the box

17 Solve $\frac{4}{x-2}+\frac{1}{x+3}=5$

$$\frac{4(x+3)+1(x-2)}{(x-2)(x+3)}=5$$

$$\frac{4x+12+x-2}{x^2+x-6}=5$$

$$\frac{5x+10}{x^2+x-6}=5$$

$\div 5$ ( ) $\div 5$

$$\frac{x+2}{x^2+x-6}=1$$

$$\cancel{x}+2=x^2+\cancel{x}-6$$

$$x^2=8$$

$$x=\pm 2\sqrt{2}$$

Answer $\pm 2\sqrt{2}$ *(7 marks)*

Do not write outside the box

19 $ABCDEFGH$ is a cuboid.
M is the midpoint of HG.
N is the midpoint of DC.

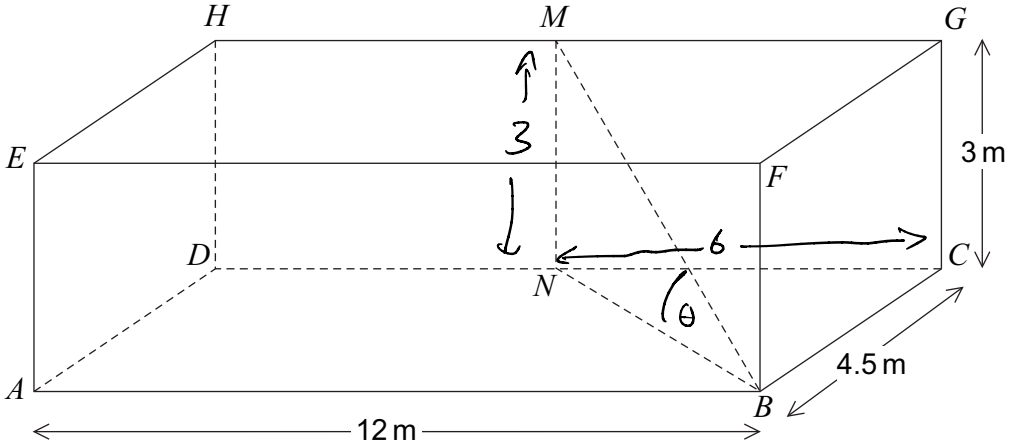

19 (a) Show that $BN = 7.5\,\text{m}$

$(BN)^2 = 6^2 + 4.5^2$

$BN = \sqrt{6^2 + 4.5^2} = 7.5\ \text{m}$

.....

.....

.....

(2 marks)

Do not write outside the box

19 (b) Work out the angle between the line MB and the plane $ABCD$.

$\tan(\theta) = \frac{3}{7.5}$

$\theta = 21.8°$ to 1dp

.....

.....

.....

Answer .....21.8..... degrees *(2 marks)*

6

Turn over ▶

Do not write outside the box

20 This right circular cone has radius $2p$ and height $5p$.
The dimensions are in centimetres.

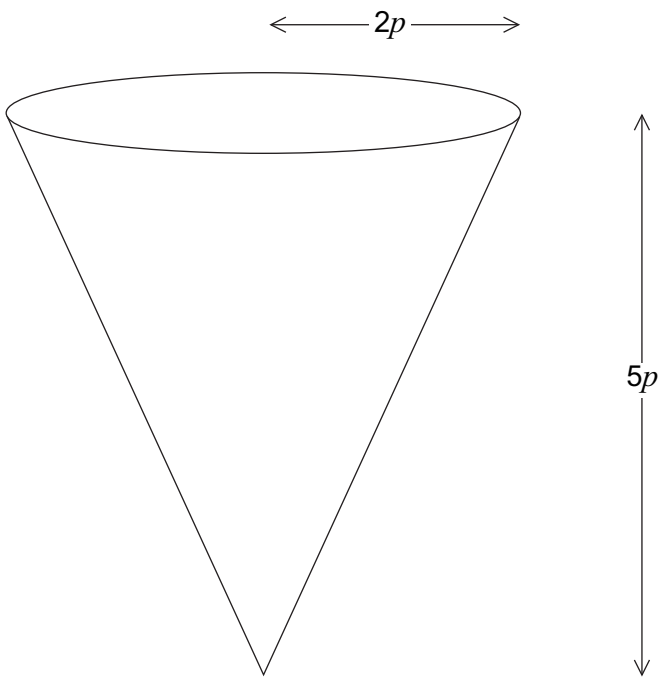

The volume of the cone is $22\,500\pi$ cm^3.

Work out the value of p.

$V = \frac{1}{3}\pi(2p)^2(5p)$

$= \frac{1}{3}\pi(4p^2)(5p) = \frac{20p^3}{3}\pi$

$22500\cancel{\pi} = \frac{20p^3}{3}\cancel{\pi}$

$3375 = p^3$

$p = 15$

$p =$ 15 cm *(4 marks)*

Do not write outside the box

2 The equation of line AB is $y = 12 - 2x$

The area of triangle OCA is 24 square units.

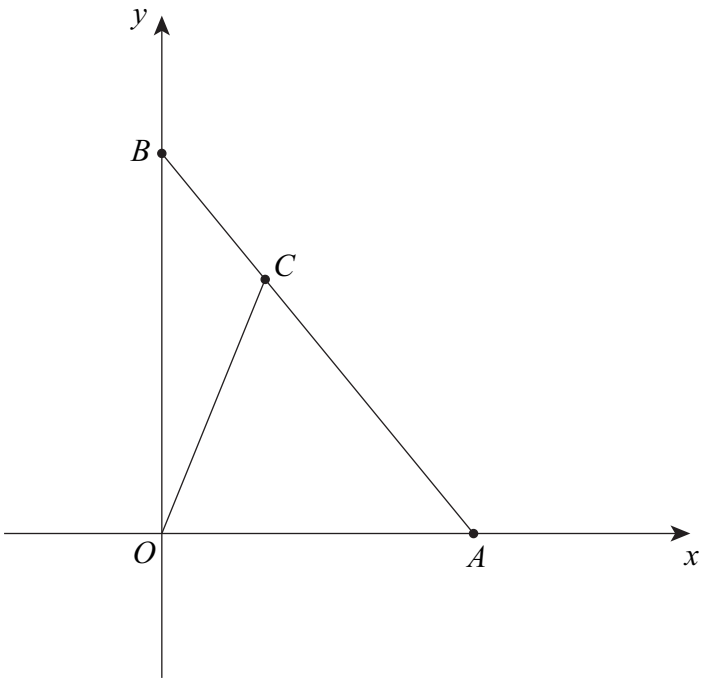

Not drawn accurately

Work out the coordinates of C.

[5 marks]

$\frac{x_A \times y_c}{2} = 24$

$\frac{6 \times y_c}{2} = 24$

$y_c = 8$

$0 = 12 - 2x$

$x = 6$

$\therefore x_A = 6$

$8 = 12 - 2x$

$-4 = -2x$

$x = 2$

Answer (2 , 8)

Do not write outside the box

3 R, S and T are on the circumference of a circle, centre O.

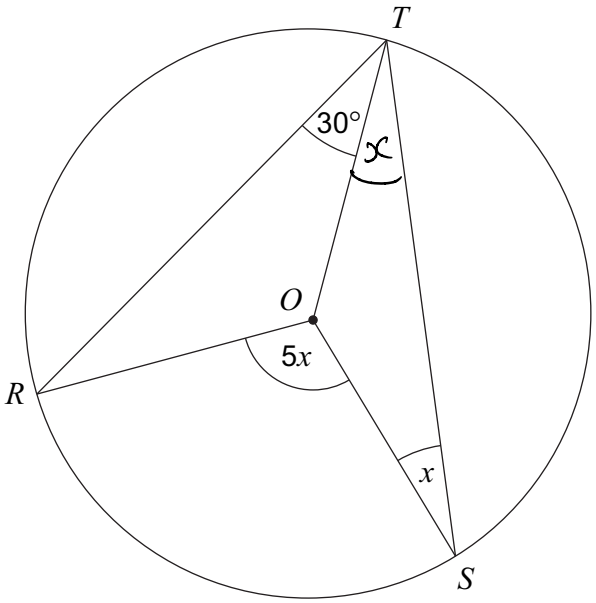

Not drawn accurately

3 (a) Give a reason why angle $OTS = x$

[1 mark]

because OT and OS are radii, so OTS is isosceles.

3 (b) Work out the value of x.

[3 marks]

$2(30 + x) = 5x$ since angle at

$60 + 2x = 5x$ centre is twice

$60 = 3x$ angle at

$20 = x$ circumference

Answer 20 degrees

Turn over for the next question

9

Do not write outside the box

5 Solve $\frac{4c+3}{2} + \frac{c-8}{5} = 1$

[4 marks]

$$\frac{5(4c+3) + 2(c-8)}{10} = 1$$

$$\frac{20c + 15 + 2c - 16}{10} = 1$$

$$22c - 1 = 10$$

$$22c = 11$$

$$c = \frac{1}{2}$$

$c =$ .....$\frac{1}{2}$.....

Turn over for the next question

11

Do not write outside the box

6 Two circles, each with centre O, are shown.
The equations of the circles are

$$x^2 + y^2 = 289 \quad \text{and} \quad x^2 + y^2 = 121$$

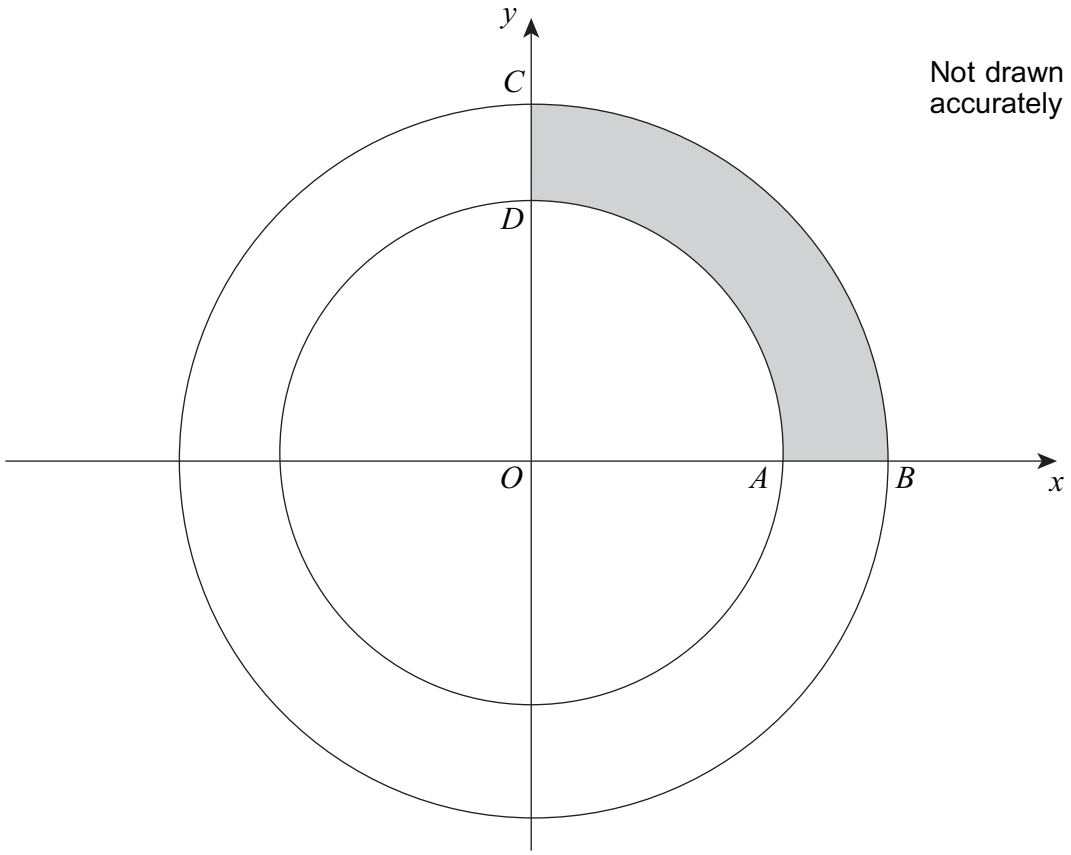

Not drawn accurately

Work out the **perimeter** of the shaded section $ABCD$.

[5 marks]

arclength $AD = \frac{90}{360} \times 2\pi(11)$

$= \frac{1}{4} \times 22\pi = \frac{11}{2}\pi$

arclength $BC = \frac{90}{360} \times 2\pi(17)$

$= \frac{1}{4} \times 34\pi = \frac{17}{2}\pi$

$AB = CD = 17 - 11 = 6$

$\therefore P = \frac{11\pi}{2} + \frac{17\pi}{2} + 2 \times 6 = 14\pi + 12 = 55.98$ to 2dp

Answer 55.98

Do not write outside the box

7 (a) Simplify $\sqrt{x^5 \times x^9}$

Give your answer in the form x^p where p is an integer.

[2 marks]

$= \sqrt{x^{14}} = (x^{14})^{1/2} = x^7$

Answer x^7

7 (b) Solve $y^{-3} = 125$

[2 marks]

$(y^{-3})^{-1/3} = (125)^{-1/3}$

$y = 5^{-1} = \frac{1}{5}$

$y =$ $1/5$

Turn over for the next question

9

Do not write outside the box

9

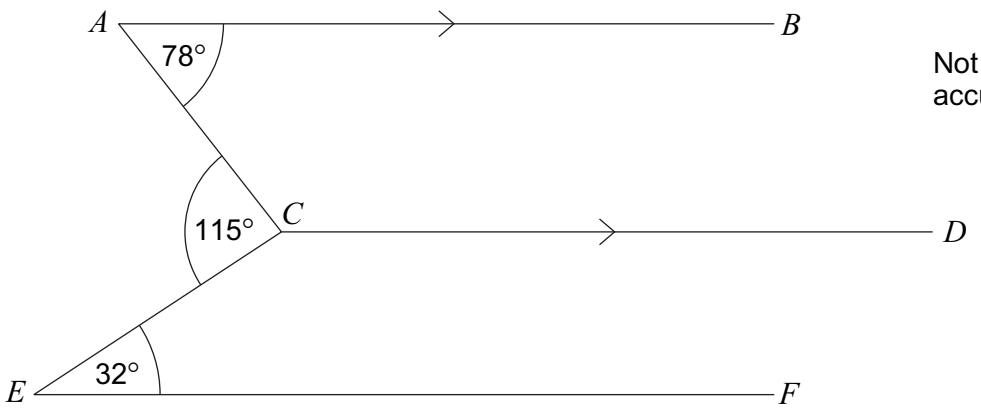

Not drawn accurately

AB is parallel to CD.

Is EF parallel to CD?
You **must** show your working.

[3 marks]

DCA = 180° − 78° = 102°

DCE = 360° − 115° − 102° = 143°

143° + 32° = 175° ≠ 180°

so EF is NOT parallel to CD

Turn over for the next question

7

Do not write outside the box

11 (a) Simplify fully $\frac{8c^7}{15d^6} \div \frac{6c^2}{5d^3}$

[3 marks]

$$\frac{8c^7}{15d^6} \times \frac{5d^3}{6c^2}$$

$$= \frac{40c^7d^3}{90c^2d^6}$$

$$= \frac{4c^5}{9d^3}$$

Answer $\frac{4c^5}{9d^3}$

11 (b) Write as a single fraction $\frac{5}{m+1} + \frac{6}{m-4}$

Give your answer in its simplest form.

[4 marks]

$$\frac{5(m-4)+6(m+1)}{(m+1)(m-4)}$$

$$= \frac{5m-20+6m+6}{(m+1)(m-4)}$$

$$= \frac{11m-14}{(m+1)(m-4)}$$

Answer $\frac{11m-14}{(m+1)(m-4)}$

Do not write outside the box

12 The circle $x^2 + y^2 = 20$ and the line $y = 2x$ intersect at points D and E.

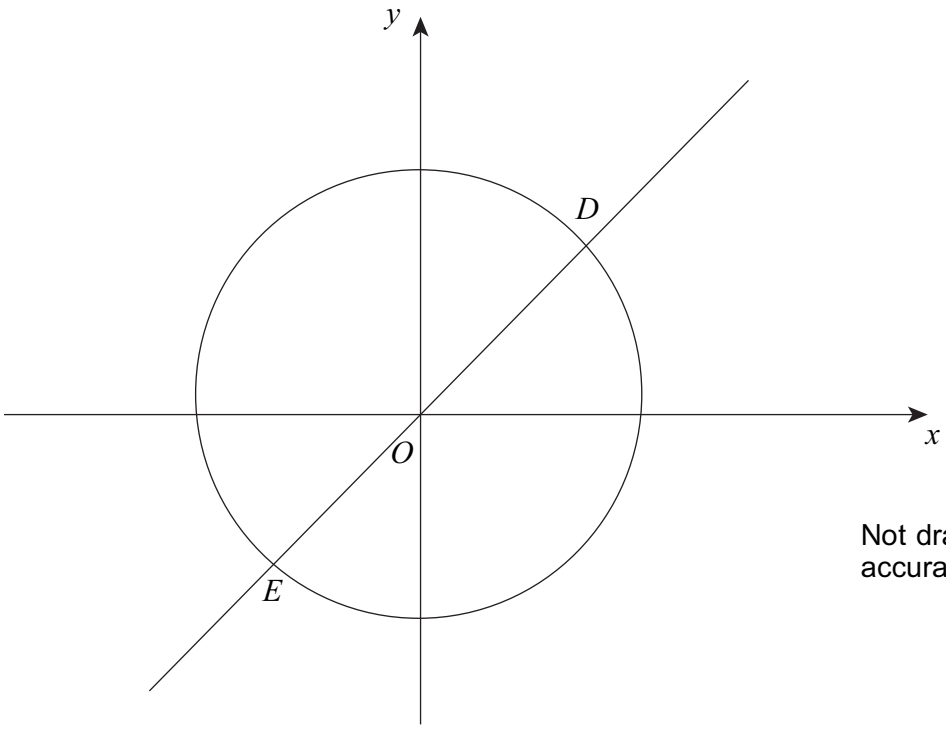

Not drawn accurately

Work out the coordinates of D and E.
Do **not** use trial and improvement.
You **must** show your working.

[5 marks]

$x^2 + (2x)^2 = 20$

$x^2 + 4x^2 = 20$

$5x^2 = 20$

$x^2 = 4$

$x = \pm 2$

when $x = 2$, $y = 2(2) = 4$

when $x = -2$, $y = 2(-2) = -4$

D (2 , 4) E (−2 , −4)

12

Turn over ▶

Do not write outside the box

14 Rearrange $x = \dfrac{2w+1}{5-3w}$ to make w the subject.

[4 marks]

$x(5-3w) = 2w+1$

$5x - 3xw = 2w+1$

$5x - 1 = 2w + 3xw$

$5x - 1 = w(2+3x)$

$w = \dfrac{5x-1}{2+3x}$

Answer $w = \dfrac{5x-1}{2+3x}$

Do not write outside the box

15 (a) The nth term of a sequence is $n^2 + 12n + 27$

By factorising, or otherwise, show that the 20th term can be written as the product of two prime numbers.

[2 marks]

$n^2 + 12n + 27 = (n+9)(n+3)$

When $n = 20$, $n^2 + 12n + 27 = (29)(23)$

both prime

15 (b) The nth term of a different sequence is $n^2 - 6n + 14$

By completing the square, or otherwise, show that every term is positive.

[3 marks]

$(n-3)^2 - 9 + 14 = (n-3)^2 + 5$

$(n-3)^2 \geq 0$ for all integer values of n

$5 > 0$

$\therefore (n-3)^2 + 5 \geq 5 > 0$

Turn over for the next question

9

Do not write outside the box

16 (a) Simplify $\dfrac{(a-2)^2}{a-2}$

[1 mark]

Answer $a-2$

16 (b) Here is a sketch of the curve $y = (x-2)^2$

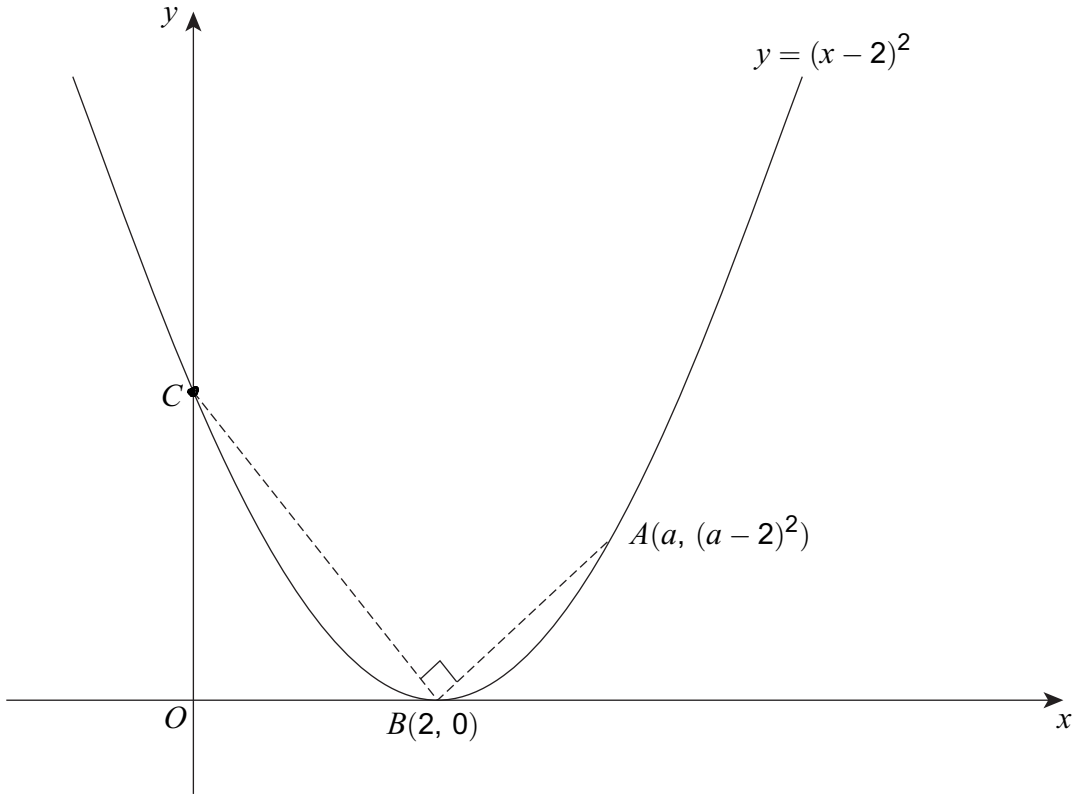

- The curve touches the x-axis at B and intersects the y-axis at C.
- Angle ABC is 90°.
- The curve passes through $A(a, (a-2)^2)$

Do not write outside the box

Work out the value of a.

[5 marks]

when $x = 0$, $y = (-2)^2 = 4$

$\therefore C = (0, 4)$

$m_{BC} = \frac{4-0}{0-2} = -2$

$m_{BA} = \frac{1}{2}$ since $BC \perp BA$

$\frac{(a-2)^2 - 0}{a-2} = \frac{1}{2}$

$2(a-2)^2 = a-2$

$\div(a-2)$ $\div(a-2)$

$2(a-2) = 1$

$a - 2 = \frac{1}{2}$ $a = \frac{5}{2}$

Answer $5/2$

since $a \neq 2$ because otherwise $A = B$.

Turn over for the next question

6

Do not write outside the box

17 (a) Factorise fully $12c^2d - 9d^2$

[2 marks]

$3d(4c^2 - 3d)$

Answer $3d(4c^2 - 3d)$

17 (b) Factorise fully $(w+4)^3 - (w+4)^2(w+1)$

[3 marks]

$(w+4)^2((w+4) - (w+1))$

$= (w+4)^2(w+4 - w-1)$

$= (w+4)^2(3)$

$= 3(w+4)^2$

Answer $3(w+4)^2$

Do not write outside the box

18 *ABCDEFGH* is a cuboid.

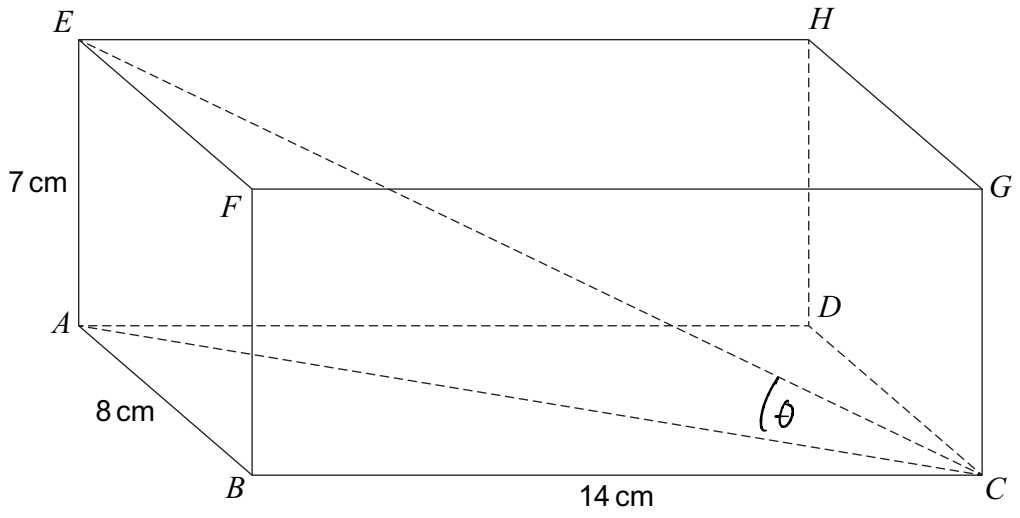

Work out the angle between *EC* and *ABCD*.

[3 marks]

$(AC)^2 = 8^2 + 14^2$

$AC = \sqrt{8^2 + 14^2} = 2\sqrt{65}$

$\tan(\theta) = \frac{7}{2\sqrt{65}}$

$\theta = \tan^{-1}\left(\frac{7}{2\sqrt{65}}\right) = 23.5^\circ$ to 1dp

Answer 23.5 degrees

8

Turn over ▶

Do not write outside the box

19 On this diagram all lengths are given in centimetres.
A cylinder and cone are joined together to make a solid.

The cylinder has radius r and height $(r+5)$

The cone has radius r and slant height $\frac{9r}{2}$

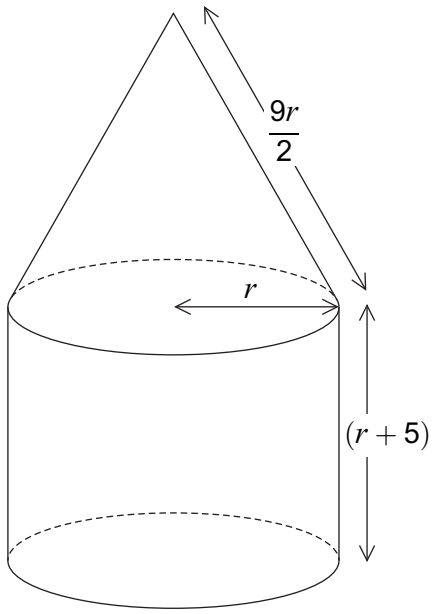

19 (a) Show that the **total** surface area of the solid, in cm^2, is $\frac{5\pi r}{2}(3r+4)$

[4 marks]

Total surface Area

$= \pi r^2 + 2\pi r(r+5) + \pi r\left(\frac{9r}{2}\right)$

$= \pi r^2 + 2\pi r^2 + 10\pi r + \frac{9\pi r^2}{2}$

$= \frac{15}{2}\pi r^2 + 10\pi r$

$= \frac{5\pi r}{2}(3r+4)$

Do not write outside the box

19 (b) The total surface area of the solid is 1200π cm^2

Work out the value of r.

[5 marks]

$\frac{5\pi r}{2}(3r+4) = 1200\pi$

$\div 5$ $\quad 5r(3r+4) = 2400$

$r(3r+4) = 480 \quad \div 5$

$3r^2 + 4r - 480 = 0$

$\times \quad +$

$-1440 \quad 4$

$36, 40$

$3r^2 + 40r - 36r - 480 = 0$

$r(3r+40) - 12(3r+40) = 0$

$(r-12)(3r+40) = 0$

OR Quadratic Formula

$r = 12, \quad \cancel{r = -\frac{40}{3}}$

since $r > 0$

Answer 12

Turn over for the next question

9

Do not write outside the box

20 The diagram shows a right-angled triangle.

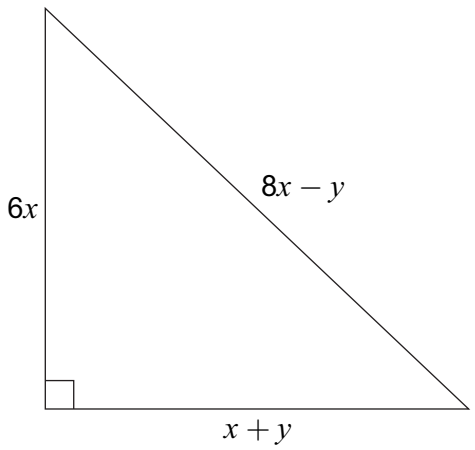

Not drawn accurately

Prove algebraically that $x : y = 2 : 3$

[6 marks]

$(6x)^2 + (x+y)^2 = (8x-y)^2$

$36x^2 + x^2 + 2xy + y^2 = 64x^2 - 16xy + y^2$

$37x^2 + 2xy + \cancel{y^2} = 64x^2 - 16xy + \cancel{y^2}$

$0 = 27x^2 - 18xy$

$0 = 3x^2 - 2xy$

$= x(3x - 2y)$

$\cancel{x = 0}$ or $3x = 2y$

since $x > 0$ $x : y = 2 : 3$